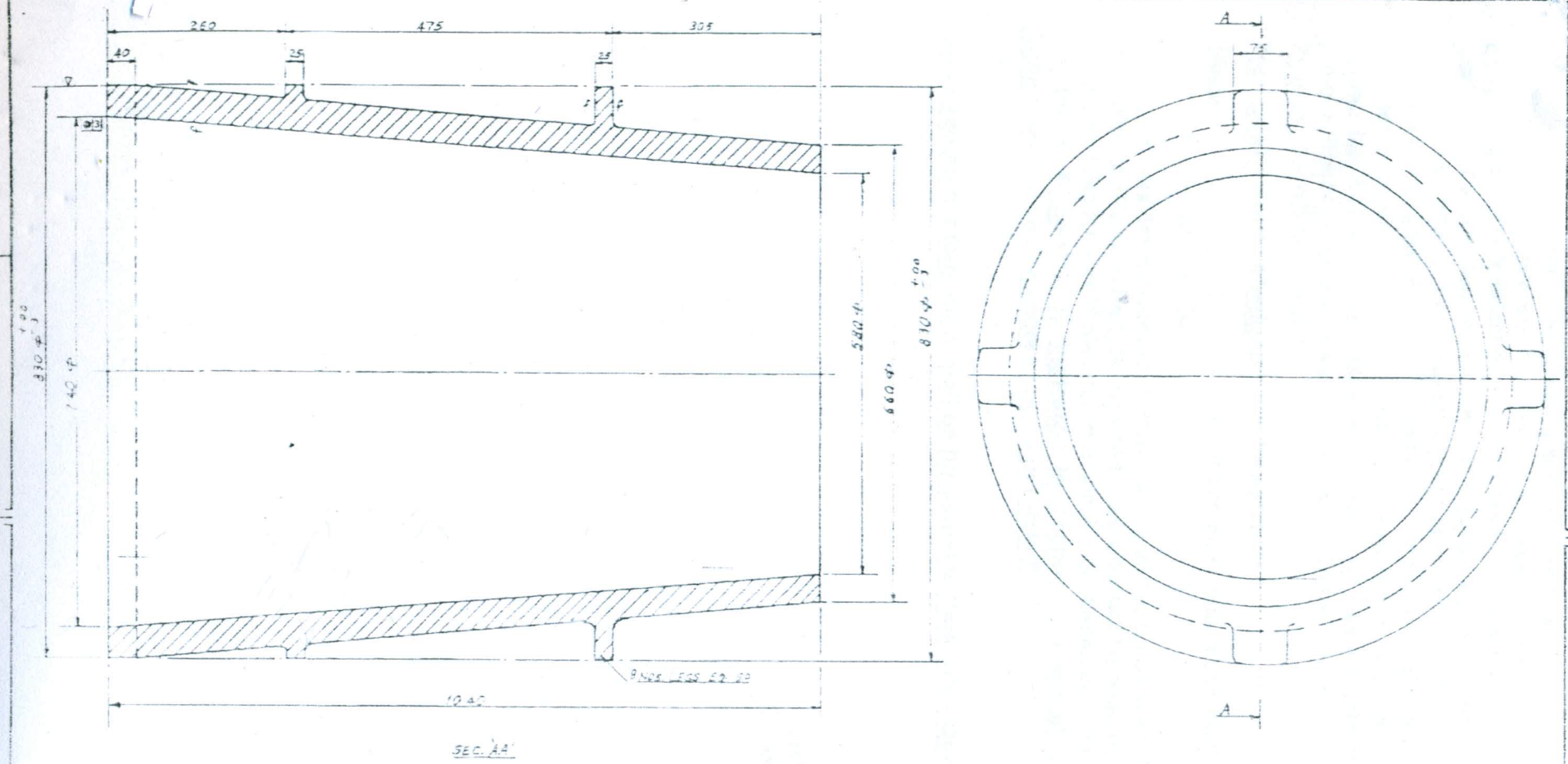

MAT'L: CHROME STEEL (IS 4896, Gr I)

DIAMENSIONAL TOLERANCE IS 4897, Gr II)

URANIUM CORPORATION OF INDIA LTD. JADUGUDA

(A GOVT. OF INDIA, DEPARTMENT OF ATOMIC ENERGY ENTERPRISE)

SCALE 1:5	FEED END TRUNNION LINER FOR SEC. MILL
DRAWN 3/4/05	
CHECKED	DIMENSIONS IN MM. / PROJECTION
APPROVED / DATE	TOLERANCE / DRG. NO. JCI/M-83/A / REVISION

NOTES

COMPOSITION OF MATERIAL